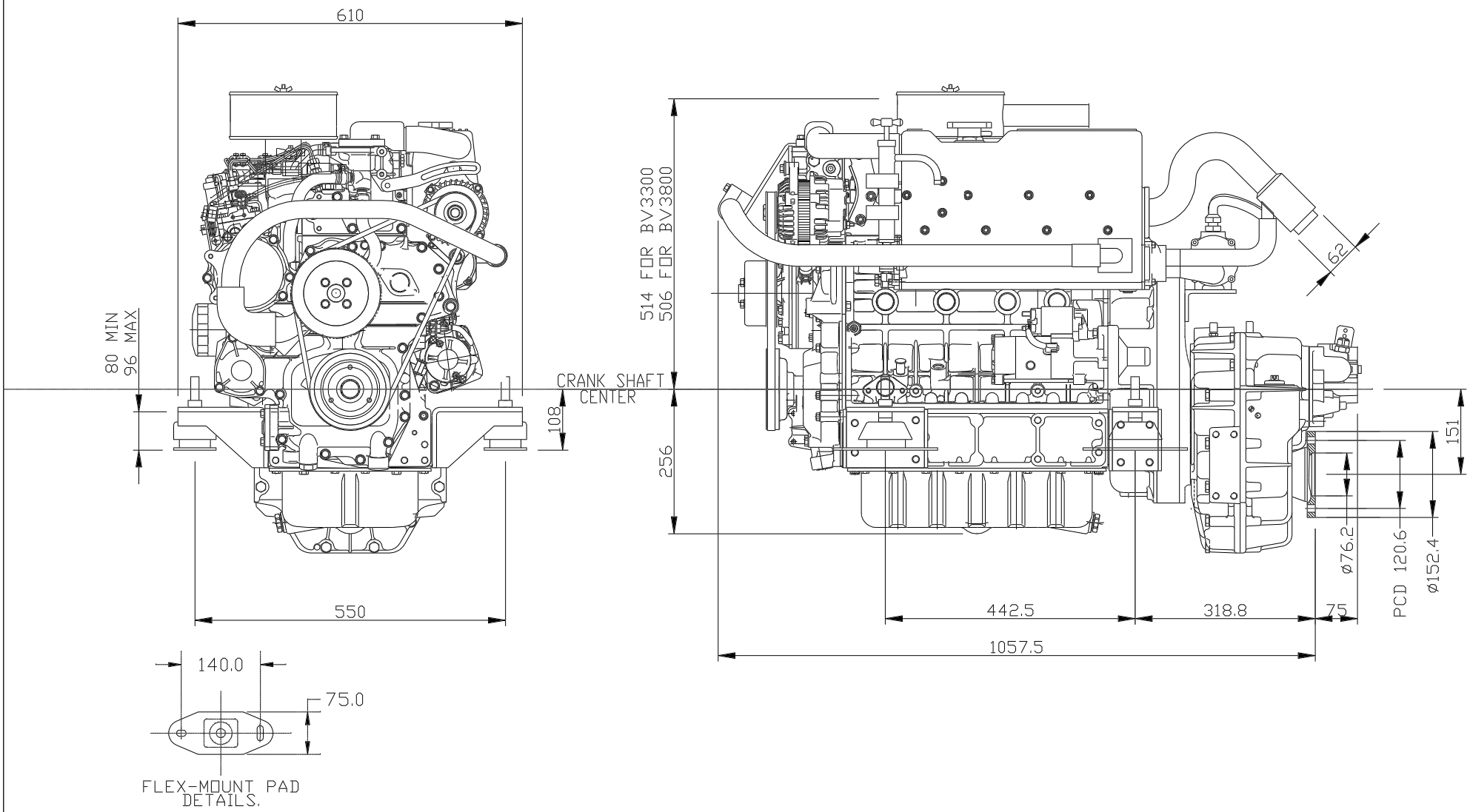

REV	DESCRIPTION	DATE	APP'D	DRAWN
01				

NOTES

DIMENSIONS IN MM (INCH)
DO NOT SCALE

TITLE

STANDARD BV3300 AND BV3800
HEAT EXCHANGE WITH A HURTH ZF45

BETA MARINE

BETA MARINE LTD,
MERRETTS MILLS,
BATH ROAD,
SOUTH WOODCHESTER,
STROUD, GLOS. GL5 5EU

TEL: (01453) 835282 FAX: (01453) 835284

DRAWN BY:–	SIZE	DWG NO.	REV
TW	A4	100-06202	00
CHECKED BY:– LT	SCALE NTS	PAGE 1 of 1	DATE 09/08/04